Budapest: +36-1-431-0980
Kecskemét: +36-76-320-271
e-mail: iroda@hidra.hu

HHB

HEAD BUSH

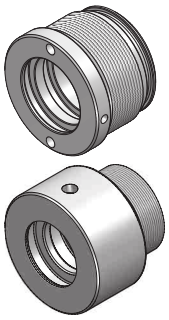

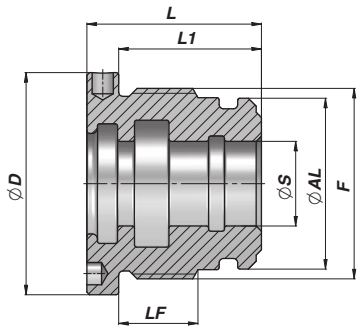

HHB

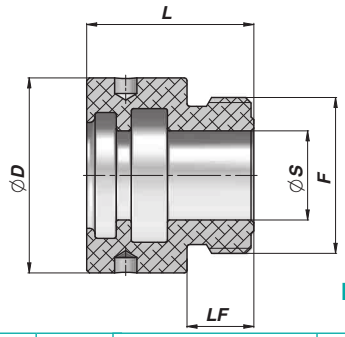

HHB03502516

Code	ØAL	ØS	ØD	F	LF	L	L1	kg	Box	Pz Pcs Stk	Seal kits
*HHB03502516	25	16	35	M28x1,5	12	30	-	0,04	BOXHHB03502516	100	HHGCG025016
*HHB04003016	30	16	40	M34x1,5	15	33	27	0,17	BOXHHB04003016	50	HHGCG030016
*HHB04203216	32	16	42	M36x1,5	15	33	27	0,18	BOXHHB04203216	50	HHGCG032016
HHB04203220	32	20	"	"	"	"	"	0,17	BOXHHB04203220	50	HHGCG032020
HHB04503520	35	20	44	M39x1,5	19	40	32	0,19	BOXHHB04503520	50	HHGCG035020
HHB04503522	35	22	"	"	"	"	"	0,17	BOXHHB04503522	50	HHGCG035022
HHB05004020	40	20	49	M44x1,5	19	40	32	0,28	BOXHHB05004020	50	HHGCG040020
HHB05004022	40	22	"	"	"	"	"	0,26	BOXHHB05004022	50	HHGCG040022
HHB05004025	40	25	"	"	"	"	"	0,23	BOXHHB05004025	50	HHGCG040025
HHB05004028	40	28	"	"	"	"	"	0,20	BOXHHB05004028	50	HHGCG040028
HHB05504522	45	22	54	M49x1,5	19	40	32	0,36	BOXHHB05504522	25	HHGCG045022
HHB05504525	45	25	"	"	"	"	"	0,33	BOXHHB05504525	25	HHGCG045025
HHB06005020	50	20	59	M54x1,5	22	43	35	0,53	BOXHHB06005020	25	HHGCG050020
HHB06005025	50	25	"	"	"	"	"	0,46	BOXHHB06005025	25	HHGCG050025
HHB06005030	50	30	"	"	"	"	"	0,39	BOXHHB06005030	25	HHGCG050030
HHB06005032	50	32	"	"	"	"	"	0,40	BOXHHB06005032	25	HHGCG050032
HHB06005135	50	35	"	"	"	"	"	0,30	BOXHHB06005135	25	HHGCG051035
**HHB06005035	50	35	"	"	17	38	30	0,29	BOXHHB06005035	25	HHGCG050035
HHB06505525	55	25	64	M60x1,5	21	43	35	0,68	BOXHHB06505525	25	HHGCG055025
HHB06505530	55	30	"	"	"	"	"	0,54	BOXHHB06505530	25	HHGCG055030
HHB06505535	55	35	"	"	"	"	"	0,45	BOXHHB06505535	25	HHGCG055035
HHB07006025	60	25	69	M64x1,5	27	50	40	0,95	BOXHHB07006025	25	HHGCG060025
HHB07006030	60	30	"	"	"	"	"	0,80	BOXHHB07006030	25	HHGCG060030
HHB07006035	60	35	"	"	"	"	"	0,70	BOXHHB07006035	25	HHGCG060035
HHB07006040	60	40	"	"	"	"	"	0,60	BOXHHB07006040	25	HHGCG060040
HHB07306330	63	30	73	M68x1,5	25	50	40	1,08	BOXHHB07306330	20	HHGCG063030
HHB07306332	63	32	"	"	"	"	"	0,90	BOXHHB07306332	20	HHGCG063032
HHB07306335	63	35	"	"	"	"	"	0,98	BOXHHB07306335	20	HHGCG063035
HHB07306336	63	36	"	"	"	"	"	0,80	BOXHHB07306336	20	HHGCG063036
HHB07306340	63	40	"	"	"	"	"	0,62	BOXHHB07306340	20	HHGCG063040
HHB07506530	65	30	74	M69x1,5	25	50	40	1,25	BOXHHB07506530	20	HHGCG065030
HHB07506535	65	35	"	"	"	"	"	1,11	BOXHHB07506535	20	HHGCG065035
HHB07506540	65	40	"	"	"	"	"	0,98	BOXHHB07506540	20	HHGCG065040
HHB07506545	65	45	"	"	"	"	"	0,72	BOXHHB07506545	20	HHGCG065045
HHB08007025	70	25	79	M74x1,5	27	50	40	1,30	BOXHHB08007025	20	HHGCG070025
HHB08007030	70	30	"	"	"	"	"	1,17	BOXHHB08007030	20	HHGCG070030
HHB08007035	70	35	"	"	"	"	"	1,06	BOXHHB08007035	20	HHGCG070035
HHB08007040	70	40	"	"	"	"	"	0,94	BOXHHB08007040	20	HHGCG070040
HHB08007045	70	45	"	"	"	"	"	0,76	BOXHHB08007045	20	HHGCG070045
HHB08007050	70	50	"	"	"	"	"	0,66	BOXHHB08007050	20	HHGCG070050
HHB09007530	75	30	89	M80x2	33	60	50	1,72	BOXHHB09007530	10	HHGCG075030
HHB09007535	75	35	"	"	"	"	"	1,62	BOXHHB09007535	10	HHGCG075035
HHB09007540	75	40	"	"	"	"	"	1,46	BOXHHB09007540	10	HHGCG075040
HHB09007545	75	45	"	"	"	"	"	1,33	BOXHHB09007545	10	HHGCG075045
HHB09508030	80	30	94	M85x2	33	60	50	2,25	BOXHHB09508030	10	HHGCG080030
HHB09508035	80	35	"	"	"	"	"	1,88	BOXHHB09508035	10	HHGCG080035
HHB09508040	80	40	"	"	"	"	"	1,73	BOXHHB09508040	10	HHGCG080040

** CG06005035: NOT SUITABLE FOR STANDARD "STL"

The version with 2 front holes is available from ØAL.30 to ØAL.100 till stock lasts.

HHB/HHB30

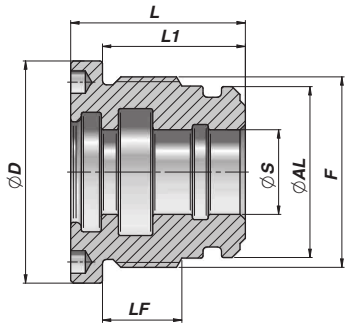

CG

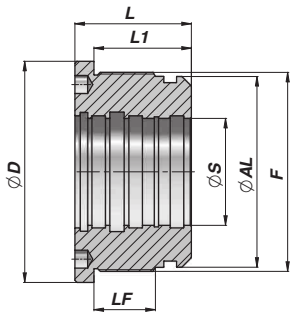

CG30

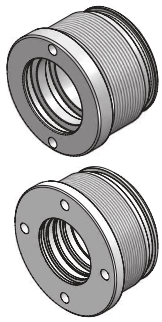

Code	ØAL	ØS	ØD	F	LF	L	L1	kg	Box	Pz Pcs Stk	Seal kits
HHB09508045	80	45	94	M85x2	33	60	50	1,58	BOXHHB09508045	10	HHGCG080045
HHB09508050	80	50	"	"	"	"	"	1,42	BOXHHB09508050	10	HHGCG080050
HHB09508055	80	55	"	"	"	"	"	1,40	BOXHHB09508055	10	HHGCG080055
HHB09508060	80	60	"	"	"	"	"	1,38	BOXHHB09508060	10	HHGCG080060
HHB10008535	85	35	99	M90x2	33	60	50	2,15	BOXHHB10008535	10	HHGCG085035
HHB10008540	85	40	"	"	"	"	"	2,00	BOXHHB10008540	10	HHGCG085040
HHB10008545	85	45	"	"	"	"	"	1,85	BOXHHB10008545	10	HHGCG085045
HHB10008550	85	50	"	"	"	"	"	1,67	BOXHHB10008550	10	HHGCG085050
HHB10509040	90	40	104	M95x2	33	60	50	2,31	BOXHHB10509040	5	HHGCG090040
HHB10509045	90	45	"	"	"	"	"	2,16	BOXHHB10509045	5	HHGCG090045
HHB10509050	90	50	"	"	"	"	"	1,99	BOXHHB10509050	5	HHGCG090050
HHB10509060	90	60	"	"	"	"	"	1,57	BOXHHB10509060	5	HHGCG090060
HHB11510040	100	40	114	M105x2	51	82	70	4,14	BOXHHB11510040	5	HHGCG100040
HHBMM114100040	100	40	"	"	30	65	55	3,20	BOXHHBMM114100040	5	HHGCGMM100040
HHB11510045	100	45	"	"	51	82	70	3,94	BOXHHB11510045	5	HHGCG100045
HHB11510050	100	50	"	"	"	"	"	3,71	BOXHHB11510050	5	HHGCG100050
HHBMM114100050	100	50	"	"	30	65	55	2,90	BOXHHBMM114100050	5	HHGCGMM100050
HHB11510055	100	55	"	"	51	82	70	3,68	BOXHHB11510055	5	HHGCG100055
HHB11510060	100	60	"	"	"	"	"	3,13	BOXHHB11510060	5	HHGCG100060
HHBMM114100060	100	60	"	"	30	65	55	2,40	BOXHHBMM114100060	5	HHGCGMM100060
HHB11510063	100	63	"	"	51	82	70	3,00	BOXHHB11510063	5	HHGCG100063
HHBMM114100063	100	63	"	"	30	65	55	2,30	BOXHHBMM114100063	5	HHGCGMM100063
HHB11510070	100	70	"	"	51	82	70	3,08	BOXHHB11510070	5	HHGCG100070
HHBMM114100070	100	70	"	"	30	65	55	1,90	BOXHHBMM114100070	5	HHGCGMM100070
HHB12511045	110	45	124	M115x2	41	72	60	4,60			HHGCG110045
HHB12511050	110	50	"	"	"	"	"	4,40			HHGCG110050
HHB12511060	110	60	124	M115x2	51	82	70	4,90			HHGCG110060
HHB12511070	110	70	"	"	"	"	"	4,70			HHGCG110070
HHB14012050	120	50	139	M125x2	49	82	70	6,37			HHGCG120050
HHB14012060	120	60	"	"	"	"	"	5,30			HHGCG120060
HHB14012070	120	70	"	"	"	"	"	4,57			HHGCG120070
HHB14012080	120	80	"	"	"	"	"	4,00			HHGCG120080
HHB14512560	125	60	144	M130x2	59	92	80	6,63			HHGCG125060
HHB14512570	125	70	"	"	"	"	"	5,83			HHGCG125070
HHB14512580	125	80	"	"	"	"	"	5,20			HHGCG125080
HHB14512590	125	90	"	"	"	"	"	4,20			HHGCG125090
HHB16014070	140	70	159	M145x2	59	92	80	9,12			HHGCG140070
HHB16014080	140	80	"	"	"	"	"	8,40			HHGCG140080
HHB17015070	150	70	169	M155x2	69	102	90	10,58			HHGCG150070
HHB17015080	150	80	"	"	"	"	"	9,75			HHGCG150080
HHB18016080	160	80	179	M165x2	69	102	90	13,10			HHGCG160080
HHB18016090	160	90	"	"	"	"	"	12,07			HHGCG160090
HHB30180100	180	100	210	M188x2,5	58	110	92	15,82			HHGCG3180100
HHB30180120	180	120	"	"	"	"	"	12,65			HHGCG3180120
HHB30200100	200	100	218	M208x2,5	58	110	92	20,59			HHGCG3200100
HHB30200120	200	120	"	"	"	"	"	17,40			HHGCG3200120
HHB30250120	250	120	268	M258x2,5	80	135	117	40,00			HHGCG3250120
HHB30250150	250	150	"	"	"	"	"	33,00			HHGCG3250150

MATERIAL:
HYDRAULIC CAST IRON
* ALUMINIUM UNI 2011-11S

The version with 2 front holes is available from ØAL.30 to ØAL.100 till stock lasts.

HHBMM: NOT SUITABLE FOR STANDARD "STL"